ACTUATECH
ACTUATOR TECHNOLOGY

Actuator datasheet

# GS1920F16

Modification reserved. Rev.date 05.2021.
No guarantee for accuracy.
Older data sheets are invalid

COMPANY WITH MANAGEMENT SYSTEM CERTIFIED BY DNV GL
= ISO 9001 =
= ISO 14001 =

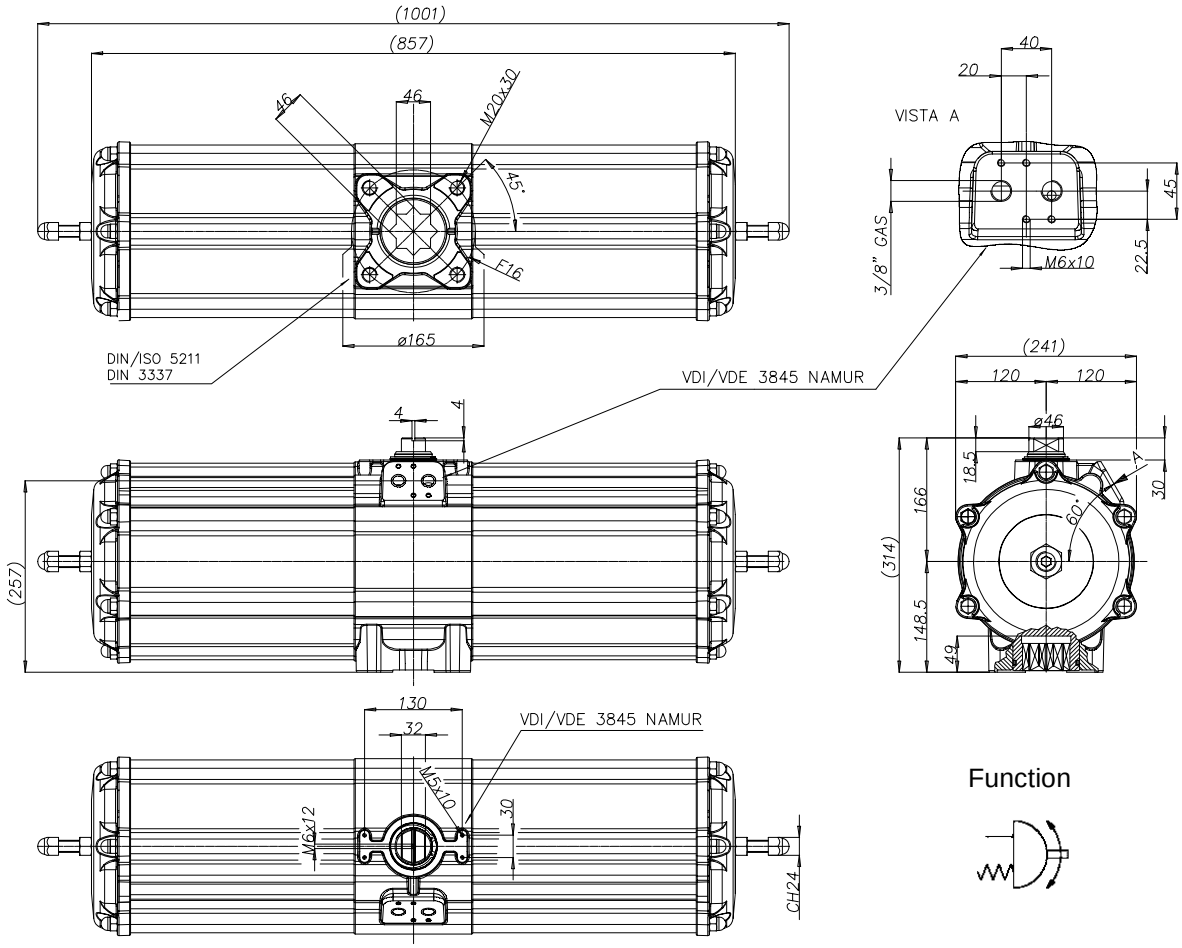


Function



**Spring return Actuators Normally Closed (N.C.)- Output Torque related to rotation angle , in Nm**
**( 0°valve closed 90° valve open )**

| Spring Torque | | | | Air pressure supply in bar | | | | | | | | | | | | | | | | | | | | | | | | | | | | | | |
|---|---|---|---|---|---|---|---|---|---|---|---|---|---|---|---|---|---|---|---|---|---|---|---|---|---|---|---|---|---|---|---|---|---|---|
| SIZE | 0° | 50° | 90° | 2,4 | | | 2,8 | | | 3 | | | 3,5 | | | 4,2 | | | 5 | | | 5,6 | | | 6 | | | 7 | | | 8 | | |
| | | | | 0° | 50° | 90° | 0° | 50° | 90° | 0° | 50° | 90° | 0° | 50° | 90° | 0° | 50° | 90° | 0° | 50° | 90° | 0° | 50° | 90° | 0° | 50° | 90° | 0° | 50° | 90° | 0° | 50° | 90° |
| 2,8 | 640 | 480 | 960 | 731 | 343 | 411 | 960 | 480 | 640 | 1074 | 549 | 754 | 1360 | 720 | 1040 | 1760 | 960 | 1440 | | | | | | | | | | | | | | | | |
| 3,5 | 800 | 600 | 1200 | | | | | | | 914 | 429 | 514 | 1200 | 600 | 800 | 1600 | 840 | 1200 | 2057 | 1114 | 1657 | 2400 | 1320 | 2000 | | | | | | | | | |
| 4,2 | 960 | 720 | 1440 | | | | | | | | | | 1040 | 480 | 560 | 1440 | 720 | 960 | 1897 | 994 | 1417 | 2240 | 1200 | 1760 | 2469 | 1337 | 1989 | 3040 | 1680 | 2560 | 3611 | 2023 | 3131 |
| 5,6 | 1280 | 960 | 1920 | | | | | | | | | | | | | | | | 1577 | 754 | 937 | 1920 | 960 | 1280 | 2149 | 1097 | 1509 | 2720 | 1440 | 2080 | 3291 | 1783 | 2651 |

**Technical Data**

| Max Pressure | ** Min Pressure | Rotation | Stroke Adjustment | Screw Stroke Adjustment | *Moving time (sec.) | | Operating temperature (°C) |
|---|---|---|---|---|---|---|---|
| | | | | | Opening | Closing | |
| 8.4 bar | 2.4 bar | 92°<br>-1° +91° | 10 ° | For 1° drive<br>Need 5/4 turn screw | 7 | 8 | Standard –20°C +80°C<br>High temperature –20°C +150°C<br>Low temperature –50°C +60°C |

| Weight Kg | Chamber Ø (mm) | Air volume L/cycle | Maximum flange torque values |
|---|---|---|---|
| 67 | 208 | 12.73 | F16 = 4000 Nm |

*The moving time could vary on different operating and installation factors.
****Attention: "Low Temperature" version is not available with 2.8 spring torque size and the Min Pressure is 3.5 bar.**

**Operating Medium**
The operating medium shall have a dew point equal to– 20 °C or, to be at least, 10 °C below the ambient temperature (ISO 85731, Class 3).The maximum particle size shall not exceed 40 µm (ISO 8573-1, Class 5).

**ACTUATECH S.p.A.**
Via San Lorenzo, 70 - 25069 Villa Carcina (BS) – ITALY Tel. (+39) 0308908142 Fax (+39) 0308908143
http://www.actuatech.com e-mail: actuatech@actuatech.com